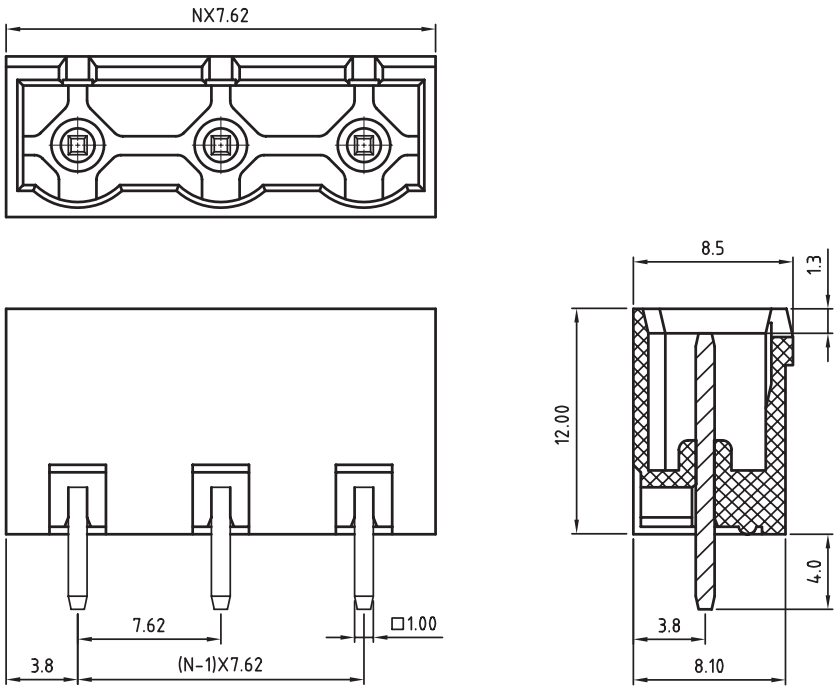

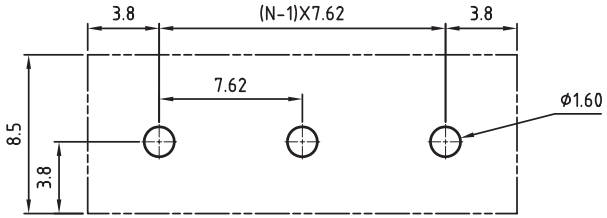

PCB LAYOUT - COMPONENT VIEW

TECHNICAL CHARACTERISTICS

MATERIAL
INSULATOR: PBT
FLAMABILITY RATING: UL94-V0
COLOR: GREEN
CONTACT: BRASS
SOLDER TAIL PLATING: TIN

ENVIRONMENTAL
OPERATING TEMPERATURE: -40 UP TO 105°C
COMPLIANCE: LEAD FREE AND ROHS

ELECTRICAL	cULus
CURRENT RATING:	20A
WORKING VOLTAGE:	300VAC
WITHSTANDING VOLTAGE:	1.6KV
CONTACT RESISTANCE:	20 mOhm max

STANDARD
CERTIFIED E315414 / MODEL NUMBER 3114

MECHANICAL
PITCH: 7.62MM

SOLDERING: WAVE PROCESS ONLY

PACKAGING: BOX

SERIE 3114

RoHS Compliant

REV	DATE	FILE	BY
G			
F			
E			
D			
C			
B	14-OCT-09	STANDARD	JP
A	12-NOV-08	PDF	JP

PROJECTION:

APPROVAL: RJ

GENERAL TOLERANCE
.X = +/- 0.2
.XX = +/- 0.15

UNIT: MM
SCALE:
SHEET: 1/1
DRAW: MARVIN

WÜRTH ELEKTRONIK

DESCRIPTION: SERIE 3114 - 7.62MM CLOSE VERTICAL PCB HEADER WR-TBL

WERI PART NO: 691 311 400 1xx

SIZE **A4**

Cautions and Warnings:

The following conditions apply to all goods within the product services of the Connectors of Würth Elektronik eiSos GmbH & Co. KG:

General:

- This electronic component is designed and developed with the intention for use in general electronics equipment.
- Before incorporating the components into any equipment in the field such as military, aerospace, aviation, nuclear control, submarine, transportation, (automotive control, train control, ship control), transportation signal, disaster prevention, medical, public information
  network etc. where higher safety and reliability are especially required or if there is possibility of direct damage or injury to human body, Würth Elektronik must be asked for a written approval.
- In addition, even electronic component in general electronic equipment, when used in electrical circuits that require high safety, reliability functions or performance, the sufficient reliability evaluation-check for the safety must be performed by the user before usage.
- The connector is designed and manufactured to be used within the datasheet specified values.
- Do not use the connector outside the datasheet specifications.
- Prevent any damage or scratches on the connector, especially on the actuator.
- Direct mechanical impact to the product shall be prevented (e.g overlapping of the PCB´s).
- The responsibility for the applicability of the customer specific products and use in a particular customer design is always within the authority of the customer. All technical specification for standard products do also apply to customer specific products.
- Würth Elektronik products are qualified according to international standards which are listed into each product reliability report.
  All products characteristics are therefore given according to results obtained throughout these detailed tests protocols. May any product characteristic be qualified by the customer, out of given Würth Elektronik specifications, Würth Elektronik cannot insure its validity and sustainability over time.
- The Connectors are designed to be used along with Würth Elektronik counterparts and tools. Würth Elektronik cannot insure the reliability of these components while being used with other products.

Product Specific:

Soldering:

- The solder profile must comply with the Würth Elektronik technical soldering specification, otherwise this will void the warranty.
- Other soldering methods are not verified and have to be validated by the customer at his own risk.

Cleaning and Washing:

- Parts are not constructed for washing, so washing can cause malfunction afterwards.
- Cleaning agent that are used to clean the customer applications might damage or change the characteristics of the component, body, pins and termination.
- Please do not submerse our washable products into water or cleaning agents or put them in locations exposed to water completely.
- When cleaning by hand (brushing), please do not use excessive force on our connectors to avoid malfunction afterwards, because customer could deform function relevant areas.
- We recommended a solution without organic acid (preserve the plating against corrosion) volatile, without residues and compatible with the plastic.
- We recommend to perform tests and to let a part in immersion in the solution 8 to 12 hours and see if there is a degradation.

Storage Conditions:

- The Connectors are considered MSL1 into closed original packaging and are not subject to storage time limits regarding the moisture sensivity but all products shall be used before the end of the period of 12 months based on the products date code, if not 100% solderability can't be warranted.

Handling:

- Do not repeatedly operate the connector with excessive force. It may damage or deforms the contact dome which results in malfunction.
- In the case a product requires particular handling precautions, in addition to the general recommendations mentioned here before, these will appear on the product datasheet.

RoHS Compliant							
G				PROJECTION:	GENERAL TOLERANCE	WÜRTH ELEKTRONIK	
F							
E							
D							
C				APPROVAL: JC	UNIT: MM	DESCRIPTION: DISCLAIMER	SIZE
B					SCALE:		
A	25/01/2018	UPDATE	ESo		SHEET: 1/2	WERI PART NO: DISCLAIMER	A4
REV	DATE	FILE	BY		DRAW: ESo		

Important Notes

The following conditions apply to all goods within the product range of Würth Elektronik eiSos GmbH & Co. KG:

1. General Customer Responsibility

Some goods within the product range of Würth Elektronik eiSos GmbH & Co. KG contain statements regarding general suitability for certain application areas. These statements about suitability are based on our knowledge and experience of typical requirements concerning the areas, serve as general guidance and cannot be estimated as binding statements about the suitability for a customer application. The responsibility for the applicability and use in a particular customer design is always solely within the authority of the customer. Due to this fact it is up to the customer to evaluate, where appropriate to investigate and decide whether the device with the specific product characteristics described in the product specification is valid and suitable for the respective customer application or not.

2. Customer Responsibility related to Specific, in particular Safety-Relevant Applications

It has to be clearly pointed out that the possibility of a malfunction of electronic components or failure before the end of the usual lifetime cannot be completely eliminated in the current state of the art, even if the products are operated within the range of the specifications.
In certain customer applications requiring a very high level of safety and especially in customer applications in which the malfunction or failure of an electronic component could endanger human life or health it must be ensured by most advanced technological aid of suitable design of the customer application that no injury or damage is caused to third parties in the event of malfunction or failure of an electronic component. Therefore, customer is cautioned to verify that data sheets are current before placing orders. The current data sheets can be downloaded at www.we-online.com.

3. Best Care and Attention

Any product-specific notes, cautions and warnings must be strictly observed. Any disregard will result in the loss of warranty.

4. Customer Support for Product Specifications

Some products within the product range may contain substances which are subject to restrictions in certain jurisdictions in order to serve specific technical requirements. Necessary information is available on request. In this case the field sales engineer or the internal sales person in charge should be contacted who will be happy to support in this matter.

5. Product R&D

Due to constant product improvement product specifications may change from time to time. As a standard reporting procedure of the Product Change Notification (PCN) according to the JEDEC-Standard inform about minor and major changes. In case of further queries regarding the PCN, the field sales engineer or the internal sales person in charge should be contacted. The basic responsibility of the customer as per Section 1 and 2 remains unaffected

6. Product Life Cycle

Due to technical progress and economical evaluation we also reserve the right to discontinue production and delivery of products. As a standard reporting procedure of the Product Termination Notification (PTN) according to the JEDEC-Standard we will inform at an early stage about inevitable product discontinuance. According to this we cannot guarantee that all products within our product range will always be available. Therefore it needs to be verified with the field sales engineer or the internal sales person in charge about the current product availability expectancy before or when the product for application design-in disposal is considered. The approach named above does not apply in the case of individual agreements deviating from the foregoing for customer-specific products.

7. Property Rights

All the rights for contractual products produced by Würth Elektronik eiSos GmbH & Co. KG on the basis of ideas, development contracts as well as models or templates that are subject to copyright, patent or commercial protection supplied to the customer will remain with Würth Elektronik eiSos GmbH & Co. KG. Würth Elektronik eiSos GmbH & Co. KG does not warrant or represent that any license, either expressed or implied, is granted under any patent right, copyright, mask work right, or other intellectual property right relating to any combination, application, or process in which Würth Elektronik eiSos GmbH & Co. KG components or services are used.

8. General Terms and Conditions

Unless otherwise agreed in individual contracts, all orders are subject to the current version of the “General Terms and Conditions of Würth Elektronik eiSos Group”, last version available at www.we-online.com.

RoHS Compliant

REV	DATE	FILE	BY
G			
F			
E			
D			
C			
B			
A	25/01/2018	UPDATE	ESo

PROJECTION:

APPROVAL: JC

GENERAL TOLERANCE

UNIT: MM

SCALE:

SHEET: 2/2

DRAW: ESo

WÜRTH ELEKTRONIK

DESCRIPTION: DISCLAIMER

WERI PART NO: DISCLAIMER

SIZE A4